Confie'à titre de secret d' entreprise. Tous droits reservés
Confiado como secreto industial. Nos reservamos todos los derechos
Comunicado como segredo empresarial. Reservados todos os direitos

Weitergabe sowie Vervielfaeltigung dieser Unterlage, Verwertung und Mitteilung ihres Inhalts nicht gestattet, soweit nicht ausdruecklich zugestanden. Zuwiderhandlungen verpflichten zu Schadensersatz. Alle Rechte vorbehalten, insbesondere fuer den Fall der Patenterteilung oder GM-Eintragung.

The reproduction, transmission or use of this document or its contents is not permitted without express written authority. Offenders will be liable for damages. All rights, including rights created by patent grant or registration of a utility model or design, are reserved.

CAD-Drawing
Manual modification prohibited

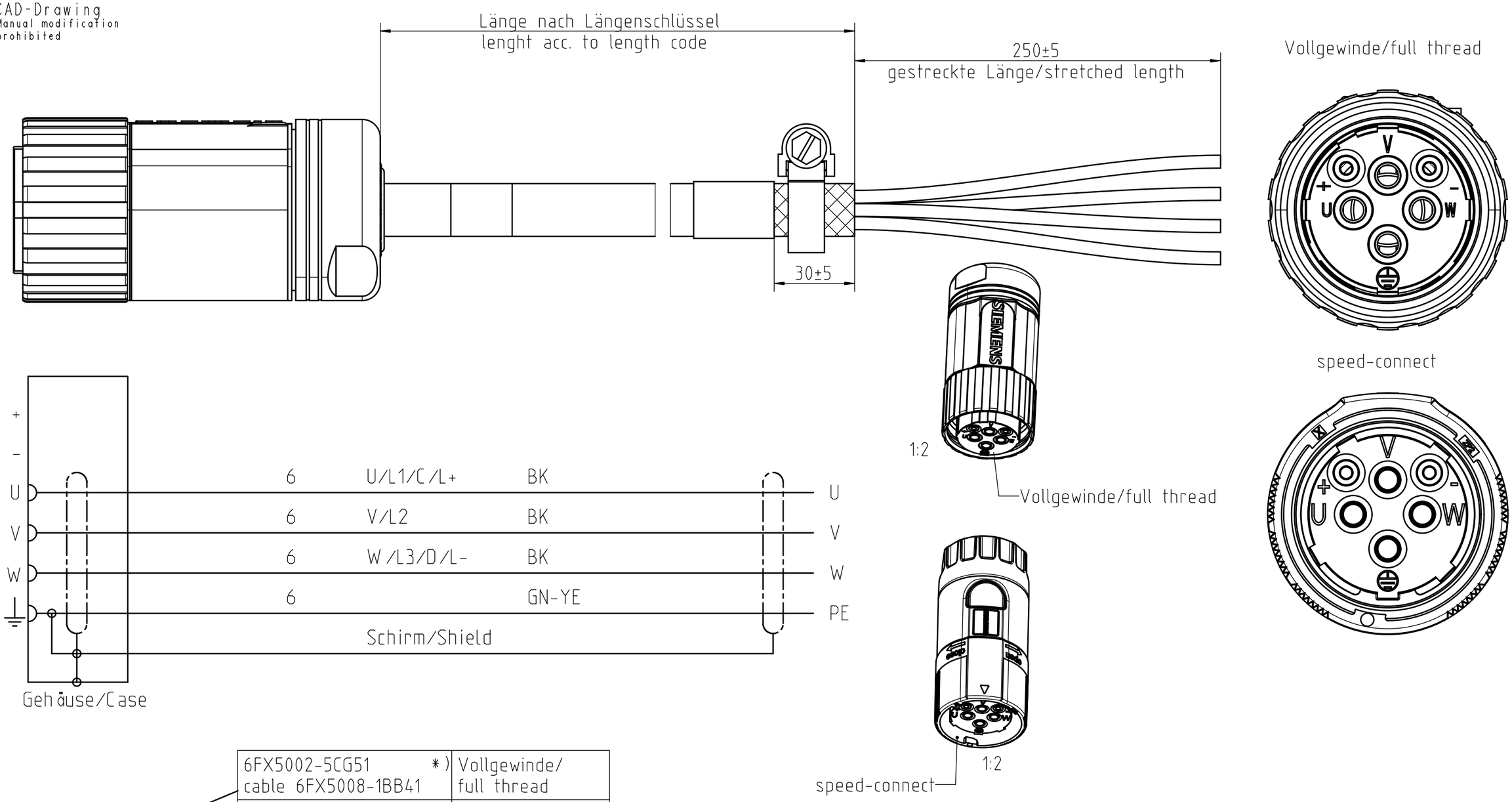

Stecker/ connector 6FX2003-0LU10	6FX5002-5CG51 *) cable 6FX5008-1BB41	Vollgewinde/ full thread
	6FX8002-5CG51 *) cable 6FX8008-1BB41	Vollgewinde/ full thread
	6FX5002-5CG52 *) cable 6FX5008-1BB41	speed-connect
Stecker/ connector 6FX2003-0LU40		
	6FX8002-5CG52 *) cable 6FX8008-1BB41	speed-connect

*) Bestellbarkeit nach Katalog
deliverable acc. to catalog

Belonging to this:

DIN 6
First angle projection

Allg.Toleranz: ISO 2768-mK
Tolerierung ISO 8015
Tolerances:

Surface:

Rev.	Modification	Date	Name
AA	79A61561	23.11.2007	AS

Date:	20.07.2006
Author:	Kowarschik
Check:	Hecht
Dep.:	A&D MC RD45
Site:	Erlangen F80

SIEMENS
A&D

Doc.-number: A5E00776512D
Scale: 1:1
kg/piece: -
Material: - -
Sheetsize: A3

Leistungsleitung
4x6 Gr.1,5
Name:
Typ/MLFB: 6FX_002-5CG51/6FX_002-5CG52

Article:	Doc.type	Revision	Sheet: / Sheets:
A5E00776512	TA	AA	1 / 1

Replacement for / replaced by:

PRO/E-CAD

* Pro/E *